M 1000 R 2023-2026,
M 1000 XR 2024-2026 &
M 1000 RR 2025-2026

FITTING INSTRUCTIONS

TO BE FITTED BY A QUALIFIED TECHNICIAN

GBRacing®
World Class Motorcycle Protection

THIS SHEET INCLUDES FITTING INSTRUCTIONS FOR THE FOLLOWING PARTS:

Secondary Alternator Cover Part No. EC-S1000RR-2025-1-GBR / Secondary Clutch Cover Part No. EC-S1000RR-2019-2-GBR / Secondary Pulse Cover Part No. EC-S1000RR-2019-3-GBR / Secondary Thermostat Cover Part No. EC-M1000RR-2025-5-GBR / Secondary Thermostat Cover Part No. EC-S1000RR-2019-5-GBR / Bullet Frame Sliders Part No. FS-S1000RR-2019-R & FS-S1000RR-2019-S

SECONDARY ALTERNATOR COVER – PART NO. EC-S1000RR-2025-1-GBR

1. Remove fairing.
2. Remove 3 existing bolts from the stock Alternator cover, shown as position Bolt 1, 2 & 3.
3. Place the Secondary Alternator Cover over the stock cover.
4. Assemble 3 replacement stainless steel M6x40-TORX bolts loosely in the correct position as shown.
5. Tighten bolts to a Torque of 10Nm. DO NOT OVERTIGHTEN.
6. Refit fairing.

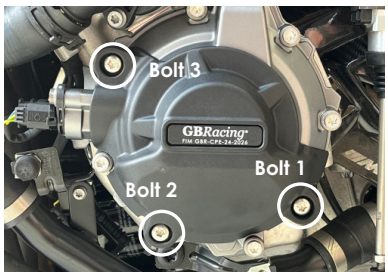

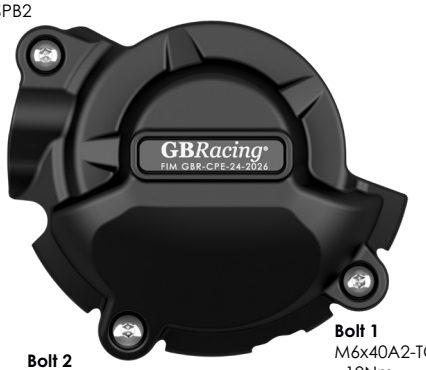

SECONDARY CLUTCH COVER – PART NO. EC-S1000RR-2019-2-GBR

1. Remove fairing.
2. Remove 4 existing bolts from the stock clutch cover, shown as position Bolt 1, 2, 3 & 4.
3. Place the Secondary Clutch Cover over the stock cover.
4. Assemble 4 replacement M6X40A2 TORX bolts, loosely in the correct position as shown.
5. Tighten bolts to a Torque of 10Nm. DO NOT OVERTIGHTEN.
6. Refit fairing.

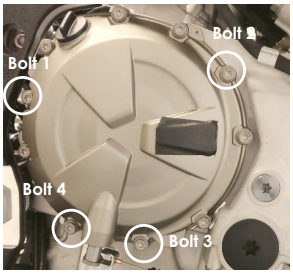

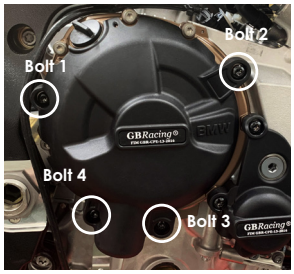

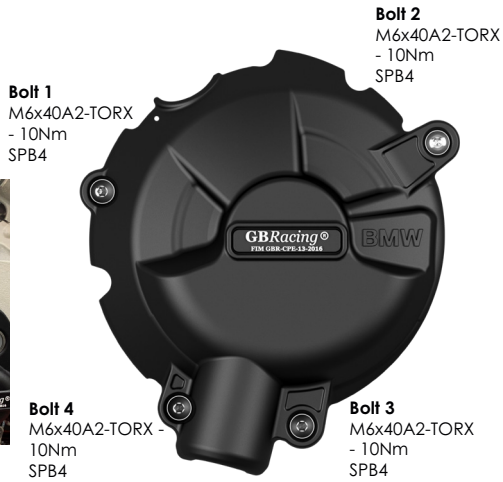

SECONDARY PULSE COVER – PART NO. EC-S1000RR-2019-3-GBR

1. Remove fairing.
2. Remove 3 existing bolts indicated in **Fig 1.**
3. Fit GBRacing fixing bracket to existing bracket as shown in **Fig 2.**
4. Fixing bracket is fitted to engine using existing clutch cable mount.
5. Place the Secondary Pulse Cover over these bolt positions in **Fig 1.**
6. Assemble 2 replacement M6X40A2 TORX bolts, loosely in the correct position as shown at bolt positions 1 & 3.
7. Bolt 2 M6X30A2 TORX will secure to the fixing bracket as indicated in **Fig 2 & 3**.
8. Tighten bolts to a Torque of 10Nm. DO NOT OVERTIGHTEN.
9. Replace fairing.

Fig 1.

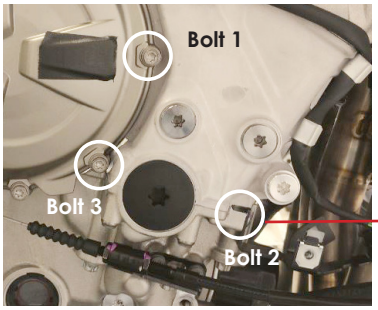

Fig 2.
Fixing Bracket (**EC-S1000RR-2019-3-FB-GBR**) for **Bolt 2**

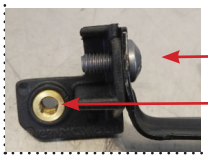

Use OE mounting bolt here

Bolt 2 M6X30A2 mounting point

Fig 3.

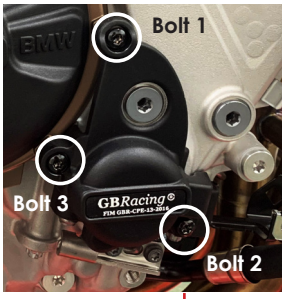

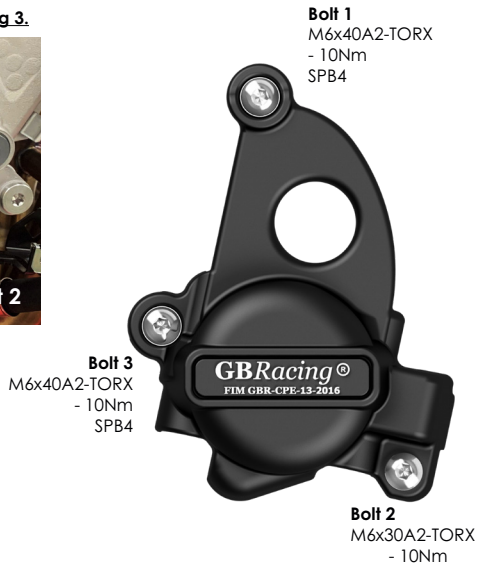

SECONDARY THERMOSTAT COVER PART NO. EC-M1000RR-2025-5-GBR

Only fits M1000RR 2025, will not fit M1000RR 2024.

1 Fitting requires a COLD engine.
2 Remove fairing.
3 Decompress the system before loosening existing stock bolts by removing radiator cap.
4 Have all 3 Replacement Bolts to hand before removing existing stock bolts.
5 Remove 3 existing bolts from the stock Thermostat Cover shown as bolt positions 1, 2 & 3
6 Place the Thermostat Cover over the stock cover.
7 Assemble 3 replacement bolts, loosely in the correct position as shown.
8 Tighten bolts to a Torque of 10Nm. DO NOT OVERTIGHTEN.
9 Replace fairing.
10 Check coolant level & top up if necessary before starting engine.

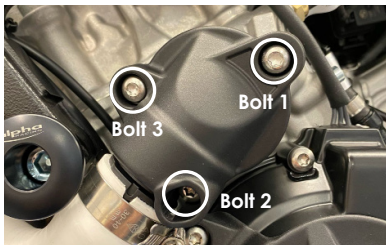

SECONDARY THERMOSTAT COVER PART NO. EC-S1000RR-2019-5-GBR

PLEASE NOTE: EC-S1000RR-2019-5-GBR will not fit M1000RR 2025.

1 Fitting requires a COLD engine.
2 Remove fairing.
3 Decompress the system before loosening existing stock bolts by removing radiator cap.
4 Have all 3 Replacement Bolts to hand before removing existing stock bolts.
5 Remove 3 existing bolts from the stock Thermostat Cover shown as bolt positions 1, 2 & 3
6 Place the Thermostat Cover over the stock cover.
7 Assemble 3 replacement bolts, loosely in the correct position as shown.
8 Tighten bolts to a Torque of 10Nm. DO NOT OVERTIGHTEN.
9 Replace fairing.
10 Check coolant level & top up if necessary before starting engine.

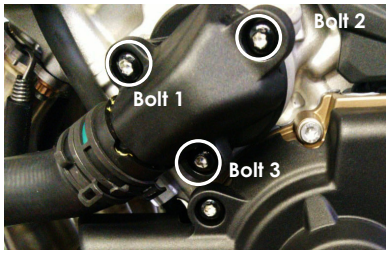

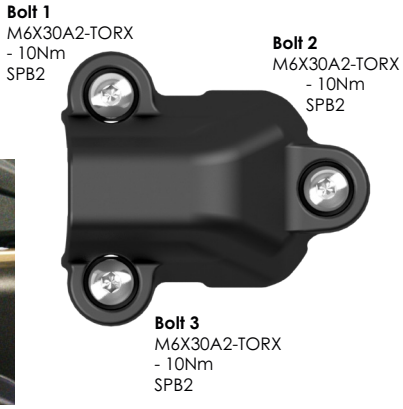

ENGINE COVER SET: EC-M1000RR-2025-SET-GBR: (THIS SET IS ONLY FOR M1000RR 2025)
EC-S1000RR-2025-1-GBR, EC-S1000RR-2019-2-GBR, EC-S1000RR-2019-3-GBR, EC-M1000RR-2025-5-GBR

ENGINE COVER SET: EC-M1000R-2024-SET-GBR: (THIS SET IS ONLY FOR M 1000 R & M 1000 XR 2024-2025)
EC-S1000RR-2025-1-GBR, EC-S1000RR-2019-2-GBR, EC-S1000RR-2019-3-GBR, EC-S1000RR-2019-5-GBR